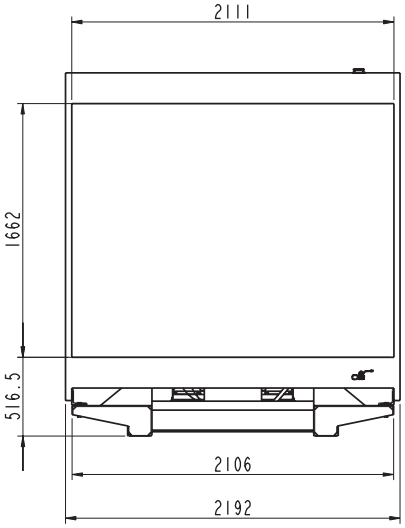

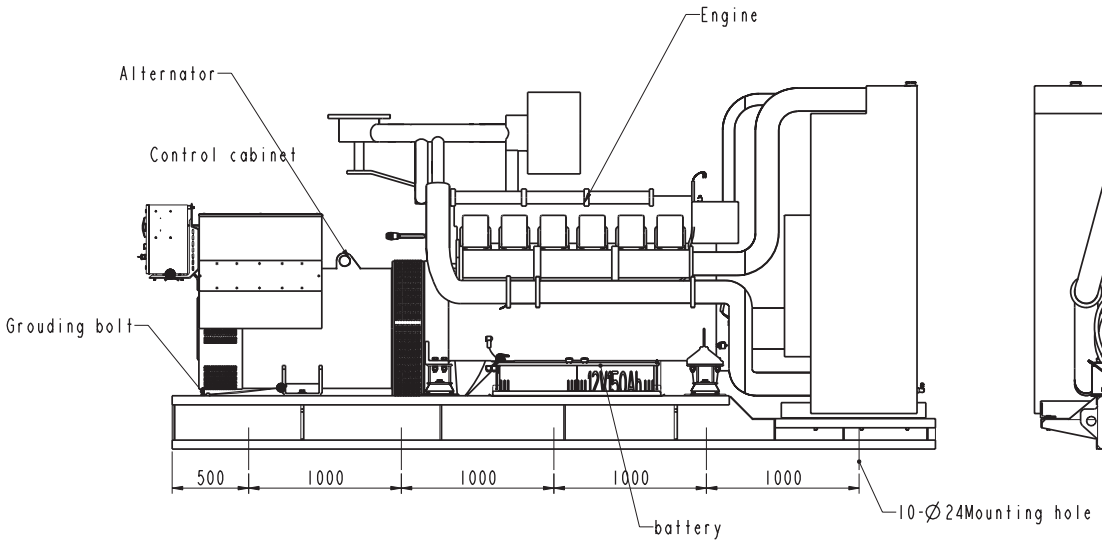

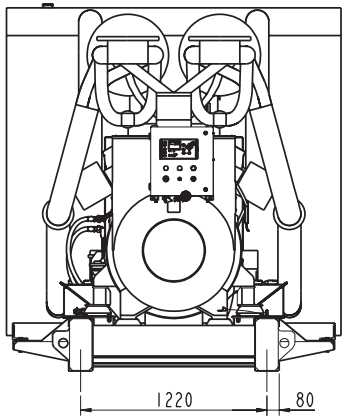

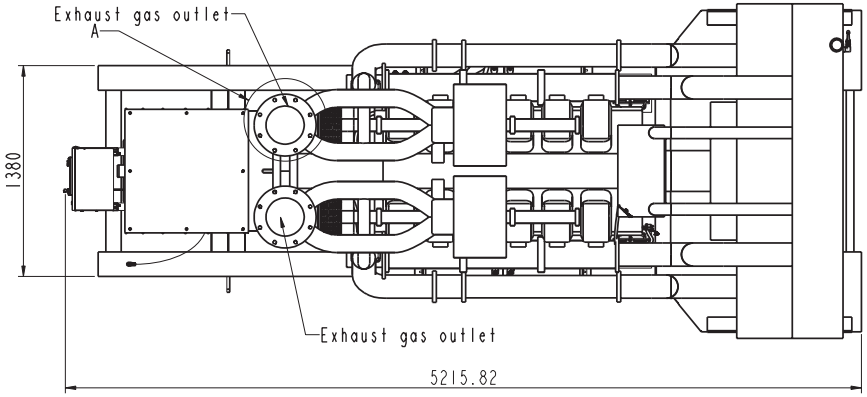

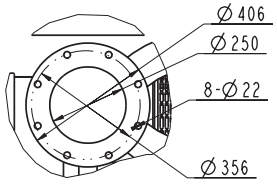

A
79:1800

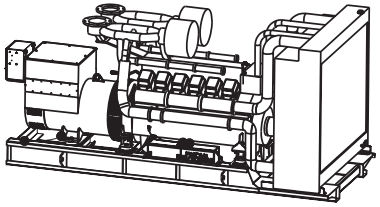

DEMENSIONS LxWxH mm	FUEL TANK CAPACITY L	DRY WEIGHT kg
5080x2192x2410	无油箱	9895

POWERlink
Power Systems
www.powerlinkgenset.com

/Appellation	Open type generator set	Edition:	FIRST ANGLE PROJECTION
/Drg.No.	1000000447	A	
Designer: 1285	Collate: 0034	Auditing: 0034	
Material		/Weight(Kg):9894.55	/Scale: 19:1800
		/Date:2011-08-20	
Technics:	Standardization:	Authorize: 0034	/Sheet: 1/2