REL NO	LTR	NO	REVISION	ZONE	DWN	CKD	APVD	DATE
ER574942	A	1	PRODUCTION_RELEASE	-	MB	PH	MEHTA	03JUL09

NOTES:

1. VIEWS SHOWING STANDARD BASE TANK & P O H ALTERNATOR.
2. FUEL TANK VOLUME 155 LTRS.
3. CUSTOMER LOAD CABLES TO BE FLEXIBLE TO ALLOW MOVEMENTS OF GENSET ON ANTI-VIBRATION MOUNTS.

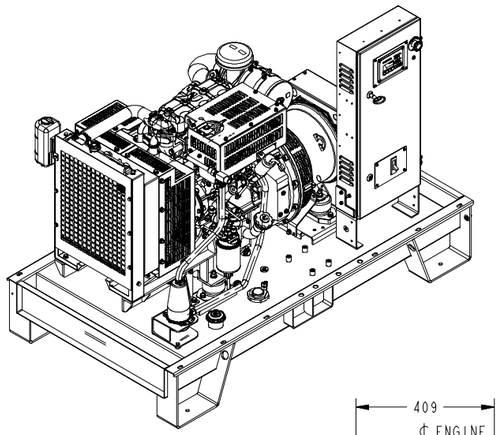

SCALE 3/32

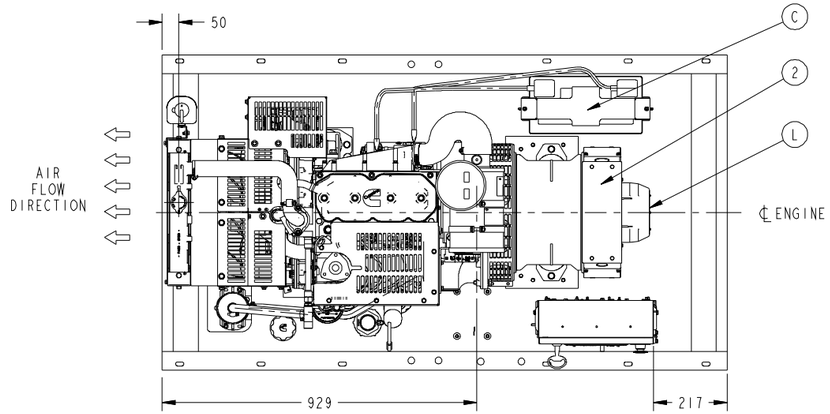

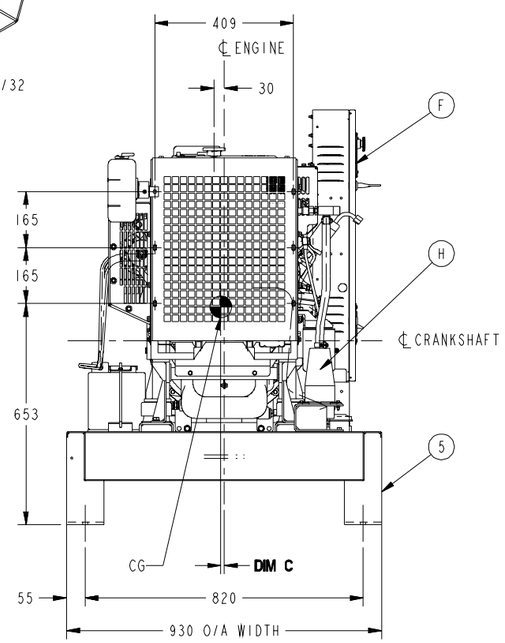

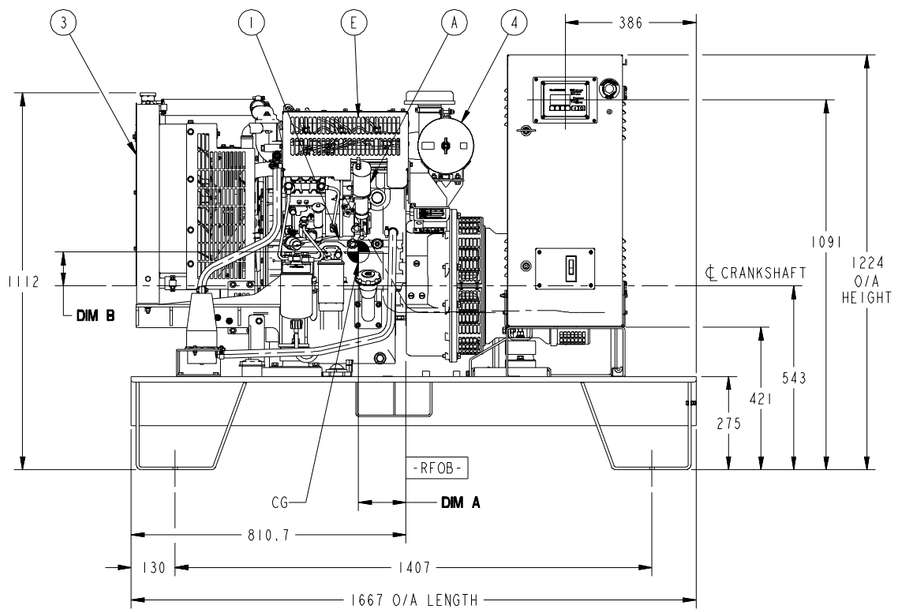

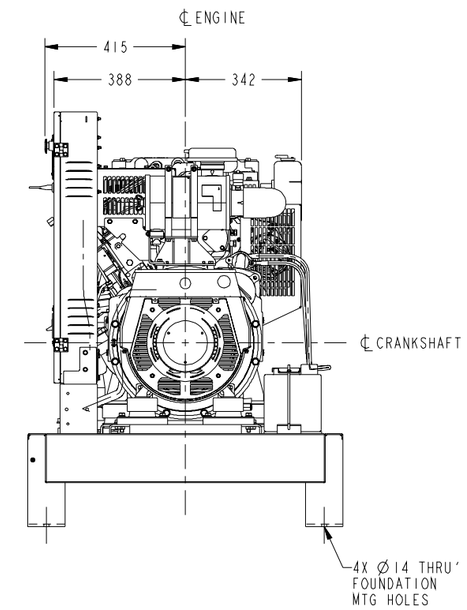

ENGINE	ALTERNATOR	GENSET DRY WEIGHT (Kg)	GENSET WET WEIGHT (Kg)	GENSET WET WEIGHT+FUEL (Kg)	CG LOCATION		
					DIM **A**	DIM **B**	DIM **C**
X2.5	P O G	509	523	655	140	100	10
X2.5	P O H	520	534	666	125	90	10

AVAILABLE OPTIONS
(NOT SHOWN UNLESS STATED)

ITEM	DESCRIPTION
A	SOLENOID COIL (SHOWN)
B	ACTUATOR
C	BATTERY (SHOWN)
D	MUFFLER
E	EXHAUST GUARD (SHOWN)
F	CONTROL PANEL PCC 1302 (SHOWN)
G	CONTROL PANEL PS 0500
H	COOLANT HEATER (SHOWN)
J	LUB OIL HEATER
K	ALTERNATOR SPACE HEATER
L	EBS (SHOWN)
M	FUEL SYSTEM (3 WAY VALVE)

QTY	ITEM	PART NO	DESCRIPTION OR MATERIAL
1	5	--	SKID ASSY
1	4	--	AIR CLEANER
1	3	--	COOLING SYSTEM
1	2	--	ALTERNATOR (CGT)
1	1	--	ENGINE (X2.5)

UNLESS OTHERWISE SPECIFIED, ALL DIMENSIONS ARE IN MILLIMETERS

DIM: X ± 1; .X ± 0.8; .XX ± 0.38

HOLE: 0.00- 4.99 +0.15/-0.08; 5.00- 9.99 +0.20/-0.10; 10.00-17.49 +0.25/-0.13; 17.50-24.99 +0.30/-0.13

ANG TOL: ± 1.0° SCALE: 1/8

SIM TO ,

DO NOT SCALE PRINT

- CONFIDENTIAL - PROPERTY OF CUMMINS POWER GENERATION GROUP

DWN M_BABUDE
CKD P_HANDE
APVD A_MEHTA
DATE 03JUL09

FOR INTERPRETATION OF DIMENSIONING AND TOLERANCING, SEE ASME Y14.5M-1994

FIRST USED ON X INTL SPEC

SITE CODE CIL

Cummins India Limited
Registered Office: Kothrud, Pune 411038 (India)

GENSET OUTLINE
X2.5, P0

DWG SIZE D 0500_5145 SHEET 1 of 1 DBO REV A

Pro/ENGINEER