0500_3878	D	Pro/ENGINEER	METRIC DWG

REL NO	LTR	NO	REVISION	ZONE	DR	CHKR	APPROVED	DATE
FRD17478	A	1	PRODUCTION RELEASE	-	MTA	BH	HENNING	08-01-03
FRD19449	B	1	ADDED 395 DIM	5B	MTA	BH	HENNING	02-10-04
		2	SEE SHEET 2	-	MTA	BH	HENNING	02-10-04
		3	SEE SHEET 5	-	MTA	BH	HENNING	02-10-04
		4	SEE SHEET 6	-	MTA	BH	HENNING	02-10-04
		5	SEE SHEET 7	-	MTA	BH	HENNING	02-10-04
FRD20897	C	1	SEE SHEET 6	-	GWH	BH	HENNING	07-19-04
		2	SEE SHEET 7	-	GWH	BH	HENNING	07-19-04
FRD20842	D	1	SEE SHEET 2	-	LDH	LH	HENNING	08-02-04
FRD21945	E	1	ASME WAS ANSI	5C	MTA	BH	HENNING	10-28-04
		2	SEE SHEET 2	-	MTA	BH	HENNING	10-28-04
		3	SEE SHEET 3	-	MTA	BH	HENNING	10-28-04

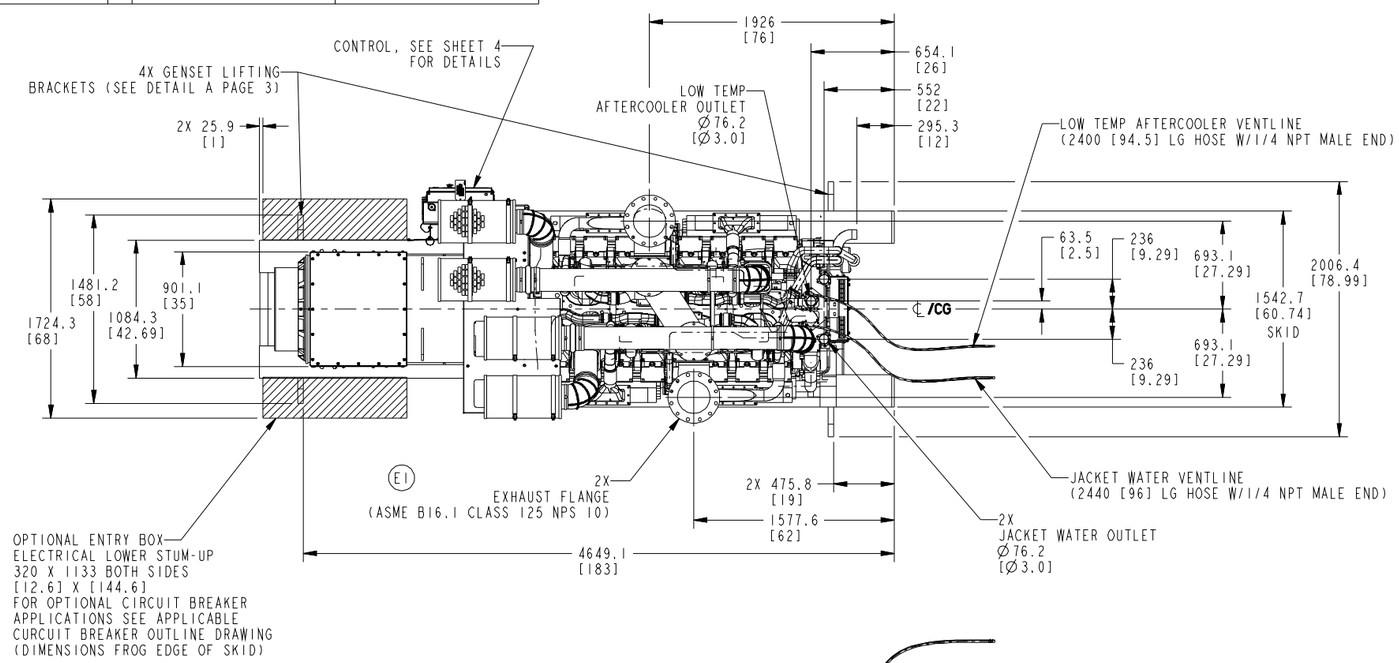

NOTE:

1. DIMENSIONS SHOWN IN [ ] BRACKETS ARE INCHES.
2. DO NOT ATTACH SOLID CONDUIT TO CONTROL BOX.
3. GENSET SHIPPED FILLED WITH ENGINE OIL.

TABULATION OIL SUMP (46.5 U.S. GALLONS)				
GEN FRAME SIZE	DIM "A" C.G.	DIM "B" C.G.	GENSET WT W/O COOLANT	
			KGS	LBS
P7G	2452 [96.5]	900 [35.4]	13104	28889

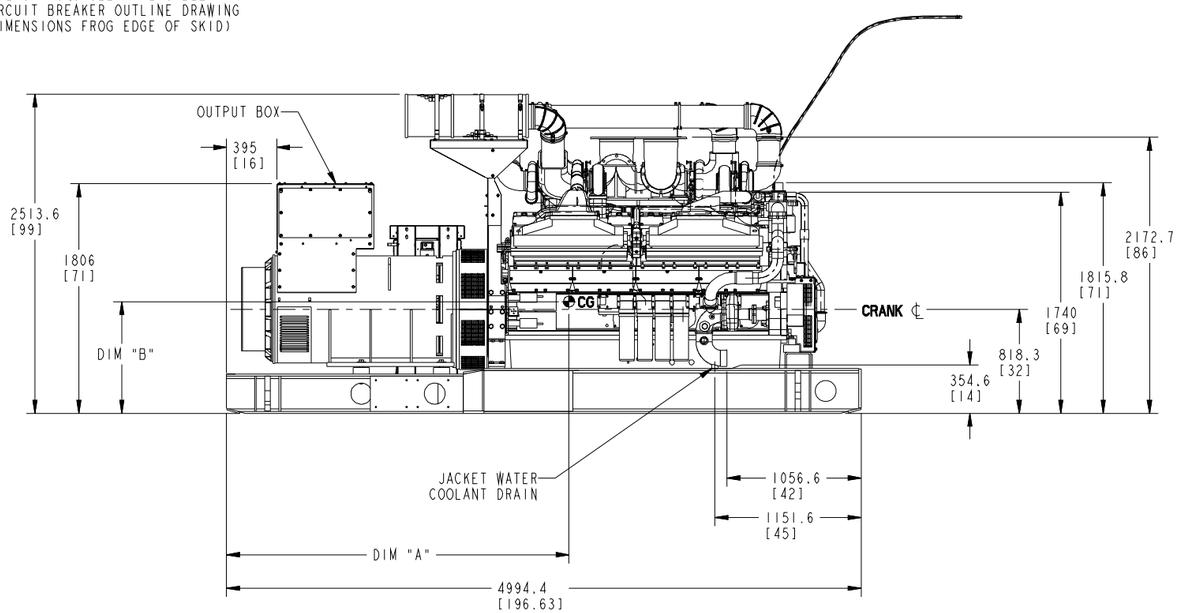

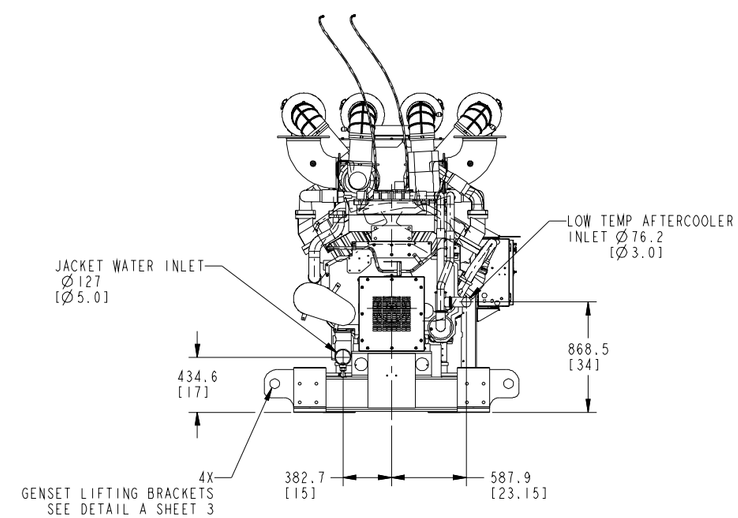

REMOTE COOLED P7 ALTERNATOR

ITEM	PART NO	DWG SIZE	DESCRIPTION OR MATERIAL	REF DES

DO NOT SCALE PRINT

TOLERANCE UNLESS OTHERWISE SPECIFIED

	mm	inch
DIM	X ± 1 .X ± 0.8 .XX ± 0.38	.X ± .XX ± .XXX±
HOLE	0.99- 4.99 +0.15/-0.08 5.00- 9.99 +0.20/-0.10 10.00-17.49 +0.25/-0.13 17.50-24.99 +0.30/-0.13	.004-.200 +.006/-.003 .201-.421 +.008/-.004 .422-.703 +.010/-.005 .704-.999 +.012/-.005

ANG TOL± 1.0°

DRAWN TO SCALE OF 1/1

SIM TO .

COPIED FROM .

THIRD ANGLE PROJECTION

THIS DOCUMENT IS THE PROPERTY OF CUMMINS POWER GENERATION. IT CONTAINS PROPRIETARY INFORMATION. INFORMATION CONTAINED HEREIN MAY NOT BE REPRODUCED, USED OR DISCLOSED EXCEPT THAN EXPRESSLY AUTHORIZED BY CUMMINS POWER GENERATION OR ITS REPRESENTATIVE

	NAME	DATE
DR	M_T_ABEL	08-01-03
CHKR ☐ MFG ☐	B HENNING	08-01-03
APPROVED	B HENNING	08-01-03

FOR INTERPRETATION OF DIMENSIONING AND TOLERANCING, SEE ANSI Y14.5M-1982

MODEL FIRST USED ON DQKH

SITE CODE PGA

CUMMINS POWER GENERATION
1400 73RD AVE NE
MINNEAPOLIS, MINNESOTA 55432

TITLE GENSET_OUTLINE (E043)

DWG NO 0500_3878 | SHEET 1 of 7 | DWG SIZE D